Windows Kernel Architecture Internals

Dave Probert

Windows Kernel Architect, Microsoft

MSRA/UR Workshop – Beijing, China

15 April 2010

NT Timeline: the first 20 years

2/1989	**Design/Coding Begins**
7/1993	NT 3.1
9/1994	NT 3.5
5/1995	NT 3.51
7/1996	NT 4.0
12/1999	NT 5.0 Windows 2000
8/2001	***NT 5.1 Windows XP – ends Windows 95/98***
3/2003	NT 5.2 Windows Server 2003
8/2004	NT 5.2 Windows XP SP2
4/2005	NT 5.2 Windows XP 64 Bit Edition (& WS03SP1)
10/2006	NT 6.0 Windows Vista (client)
2/2008	NT 6.0 Windows Server 2008 (Vista SP1)
10/2009	NT 6.1 Windows 7 & Windows Server 2008 R2

Windows Academic Program

Historically little information on NT available

- Microsoft focus was end-users and Win9x
- Source code for universities was too encumbered

Much better internals information today

- Windows Internals, 4th Ed., Russinovich & Solomon
- Windows Academic Program (universities only):
  - CRK: Curriculum Resource Kit (NT kernel in PowerPoint)
  - WRK: Windows Research Kernel (NT kernel in source)
- Chapters in leading OS textbooks (Tanenbaum, Silberschatz, Stallings)

© Microsoft Corporation

Windows Architecture

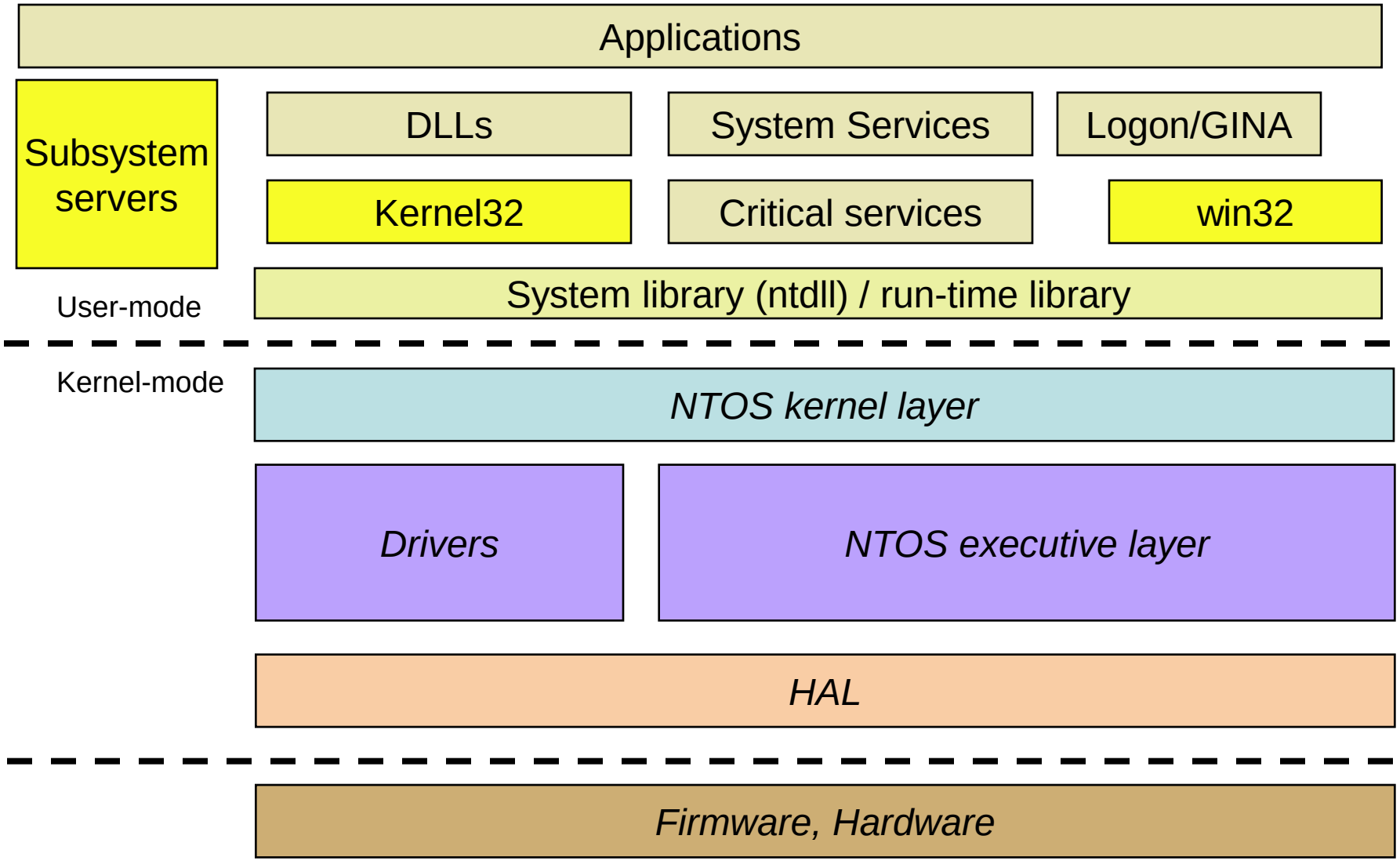

© Microsoft Corporation

Windows Kernel-mode Architecture

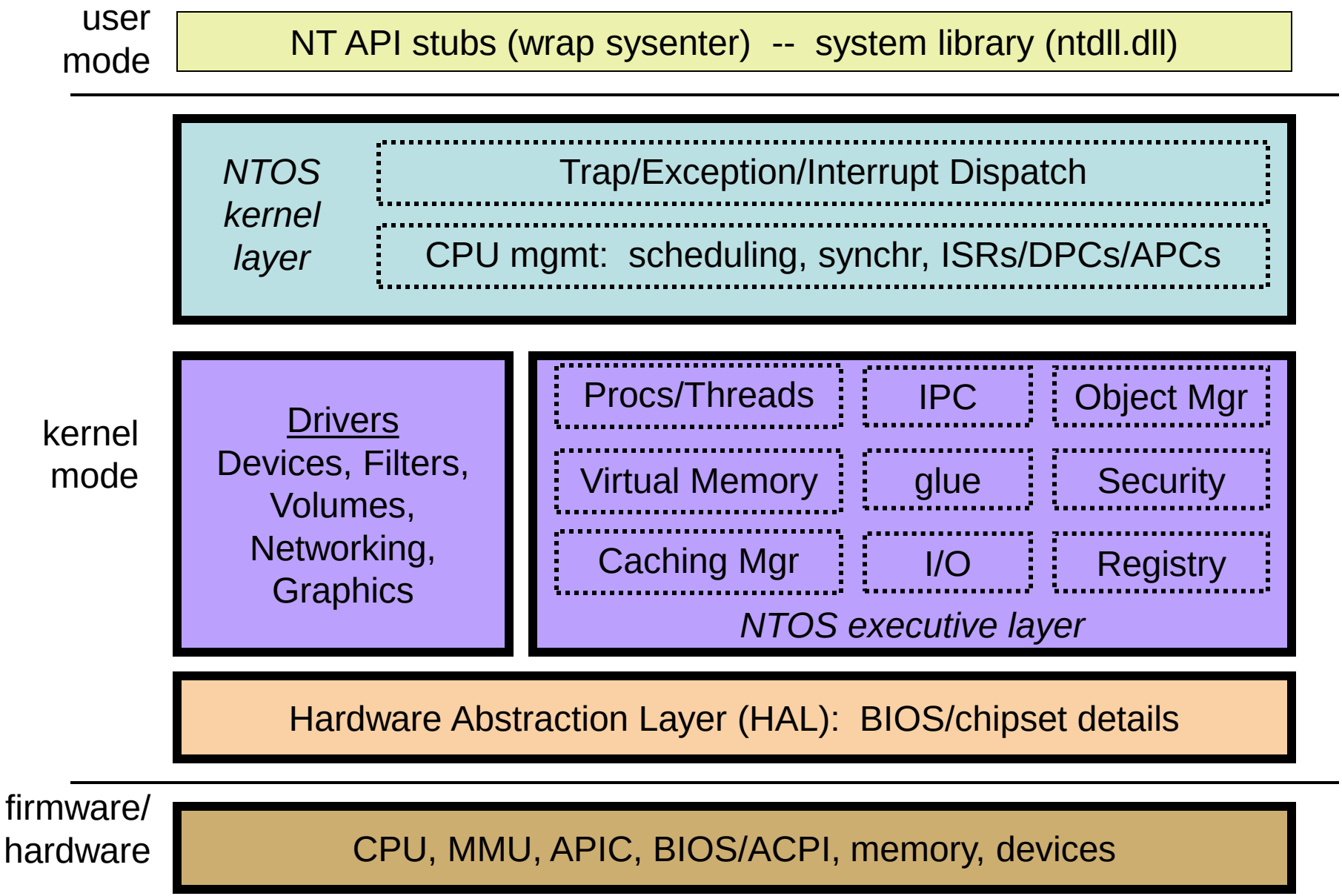

NT (Native) API examples

NtCreateProcess (&ProcHandle, Access, SectionHandle, DebugPort, ExceptionPort, …)

NtCreateThread (&ThreadHandle, ProcHandle, Access, ThreadContext, bCreateSuspended, …)

NtAllocateVirtualMemory (ProcHandle, Addr, Size, Type, Protection, …)

NtMapViewOfSection (SectHandle, ProcHandle, Addr, Size, Protection, …)

NtReadVirtualMemory (ProcHandle, Addr, Size, …)

NtDuplicateObject (srcProcHandle, srcObjHandle, dstProcHandle, dstHandle, Access, Attributes, Options)

© Microsoft Corporation

Object Manager

© Microsoft Corporation

NT Object Manager

Provides unified management of:

- kernel data structures
- kernel references
- user references (handles)
- namespace
- synchronization objects
- resource charging
- cross-process sharing
- central ACL-based security reference monitor
- configuration (registry)

\ObjectTypes

Object Manager: Directory, SymbolicLink, Type

Processes/Threads: DebugObject, Job, Process, Profile, Section, Session, Thread, Token

Synchronization:

Event, EventPair, KeyedEvent, Mutant, Semaphore, ALPC Port, IoCompletion, Timer, TpWorkerFactory

IO: Adapter, Controller, Device, Driver, File, Filter*Port

Kernel Transactions: TmEn, TmRm, TmTm, TmTx

Win32 GUI: Callback, Desktop, WindowStation

System: EtwRegistration, WmiGuid

© Microsoft Corporation

Implementation: Object Methods

Note that the methods are unrelated to actual operations on the underlying objects:

OPEN:	Create/Open/Dup/Inherit handle
CLOSE:	Called when each handle closed
DELETE:	Called on last dereference
PARSE:	Called looking up objects by name
SECURITY:	Usually *SeDefaultObjectMethod*
QUERYNAME:	Return object-specific name

© Microsoft Corporation

Naming example

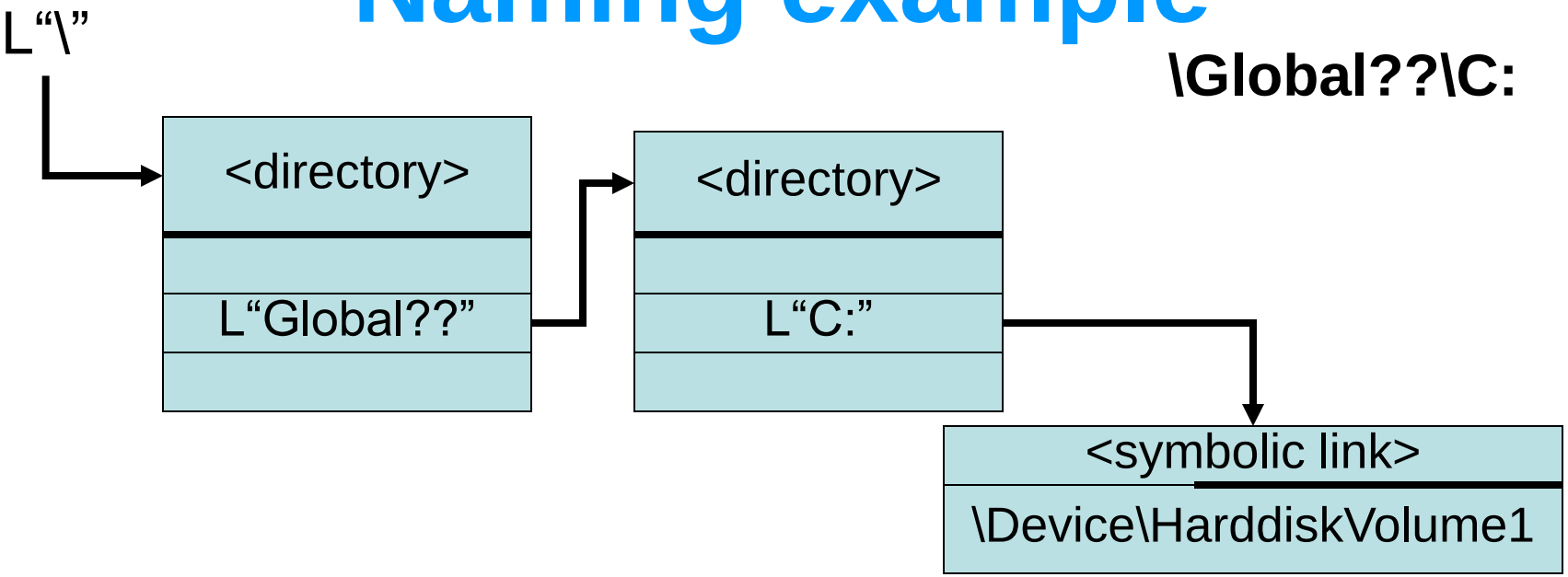

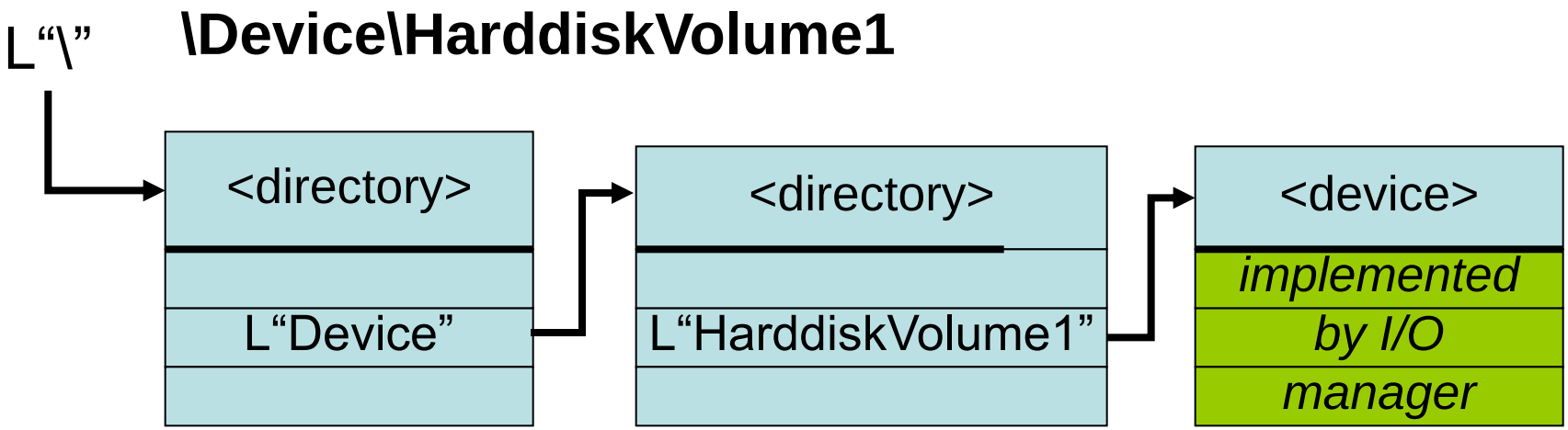

© Microsoft Corporation

Object Manager Parsing example

\Global??\C:\foo\bar.txt

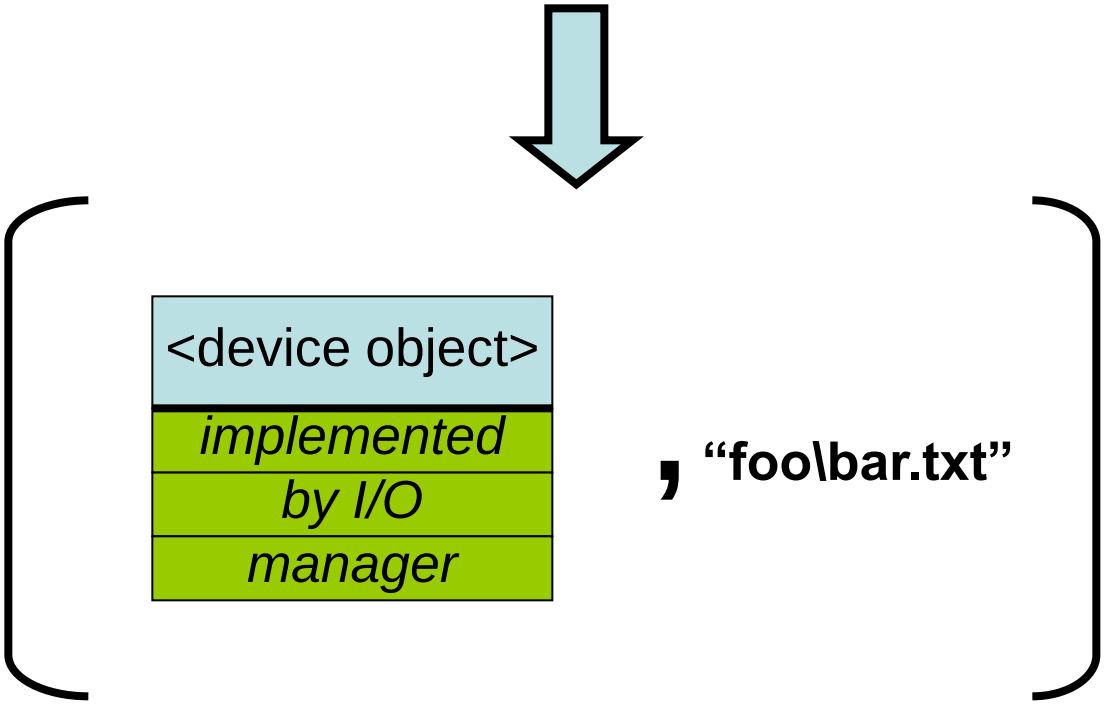

deviceobject->ParseRoutine == IopParseDevice

Note: namespace rooted in object manager, not FS

© Microsoft Corporation

I/O Support: IopParseDevice

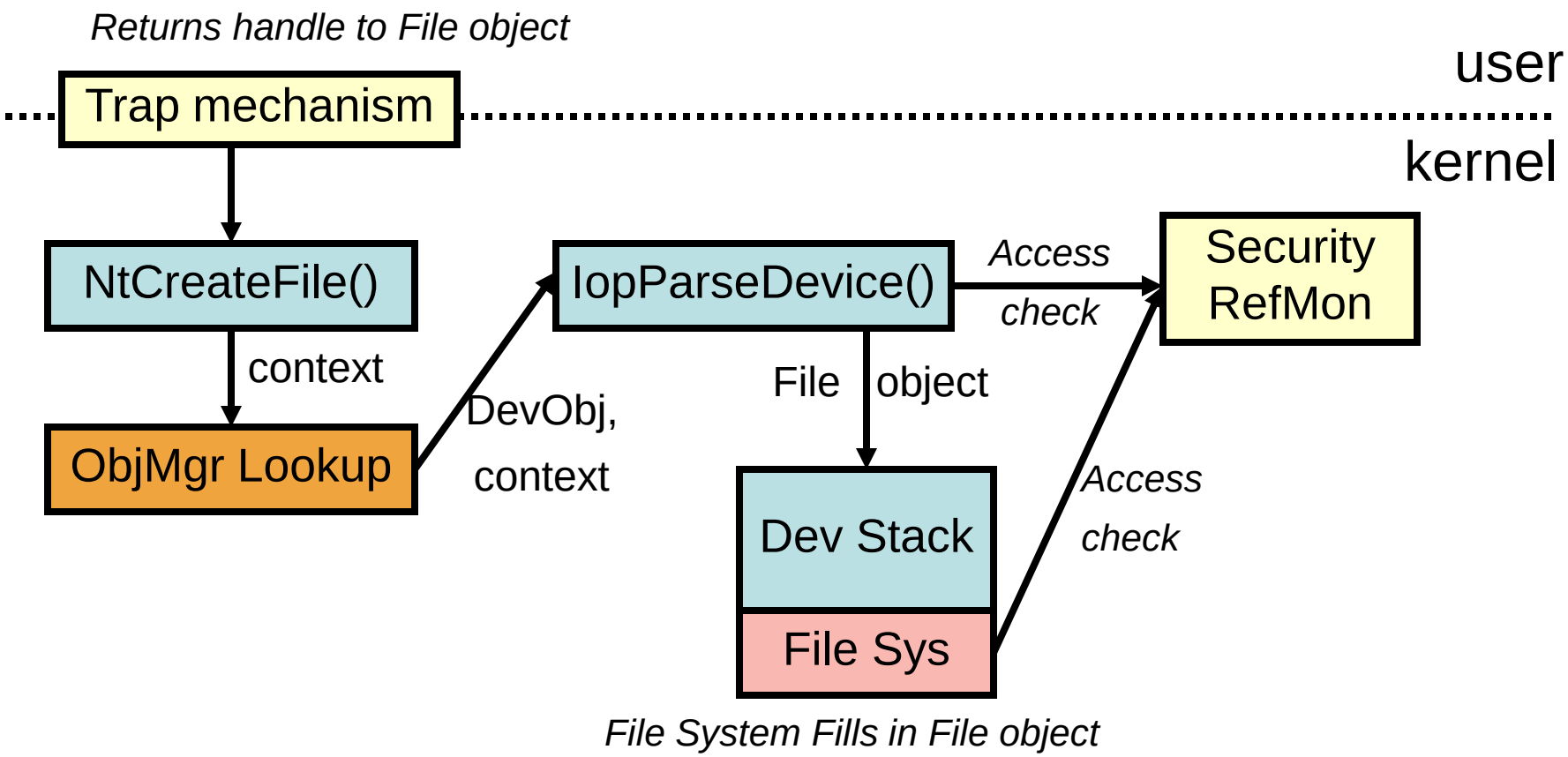

© Microsoft Corporation

Handle Table

- Every process has a handle table
  - System Process (kernel) has global handle table
  - Data structure also used to allocate/map process/thread IDs
- NT handles reference kernel data structures
  - Mostly used from user-mode
  - Kernel mode uses handles or referenced pointers
- NT APIs use explicit handles to refer to objects
  - Simplifies cross-process operations
  - Handles can be restricted and duplicated cross-process
- Handles can be used for synchronization
  - Any *dispatcher object* can be waited on
  - Multiple objects can be waited by single thread

© Microsoft Corporation

One level: (to 512 handles)

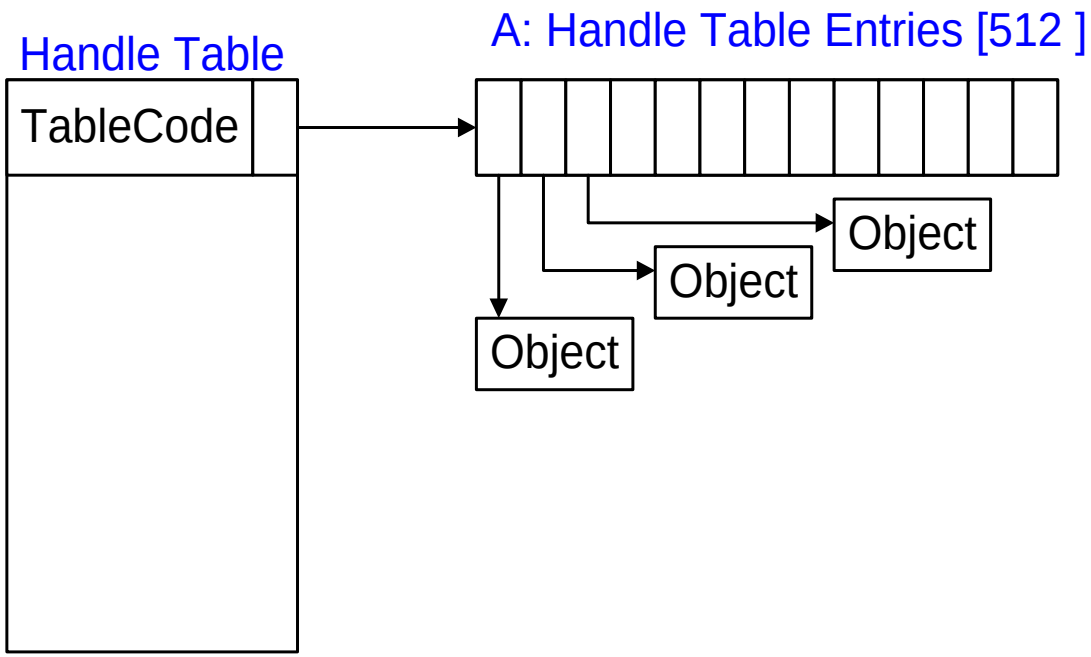

© Microsoft Corporation

Two levels: (to 512K handles)

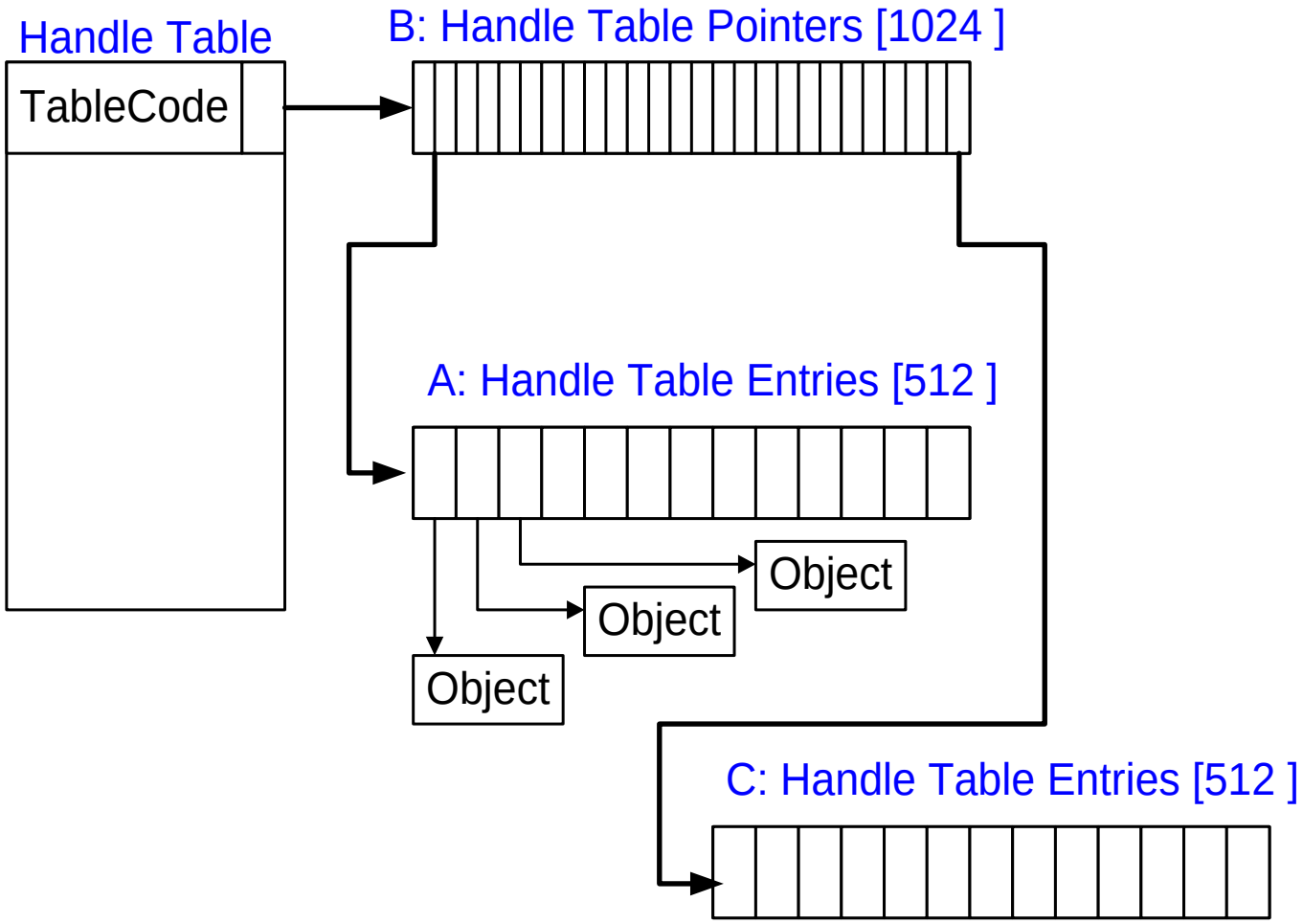

© Microsoft Corporation

Three levels: (to 16M handles)

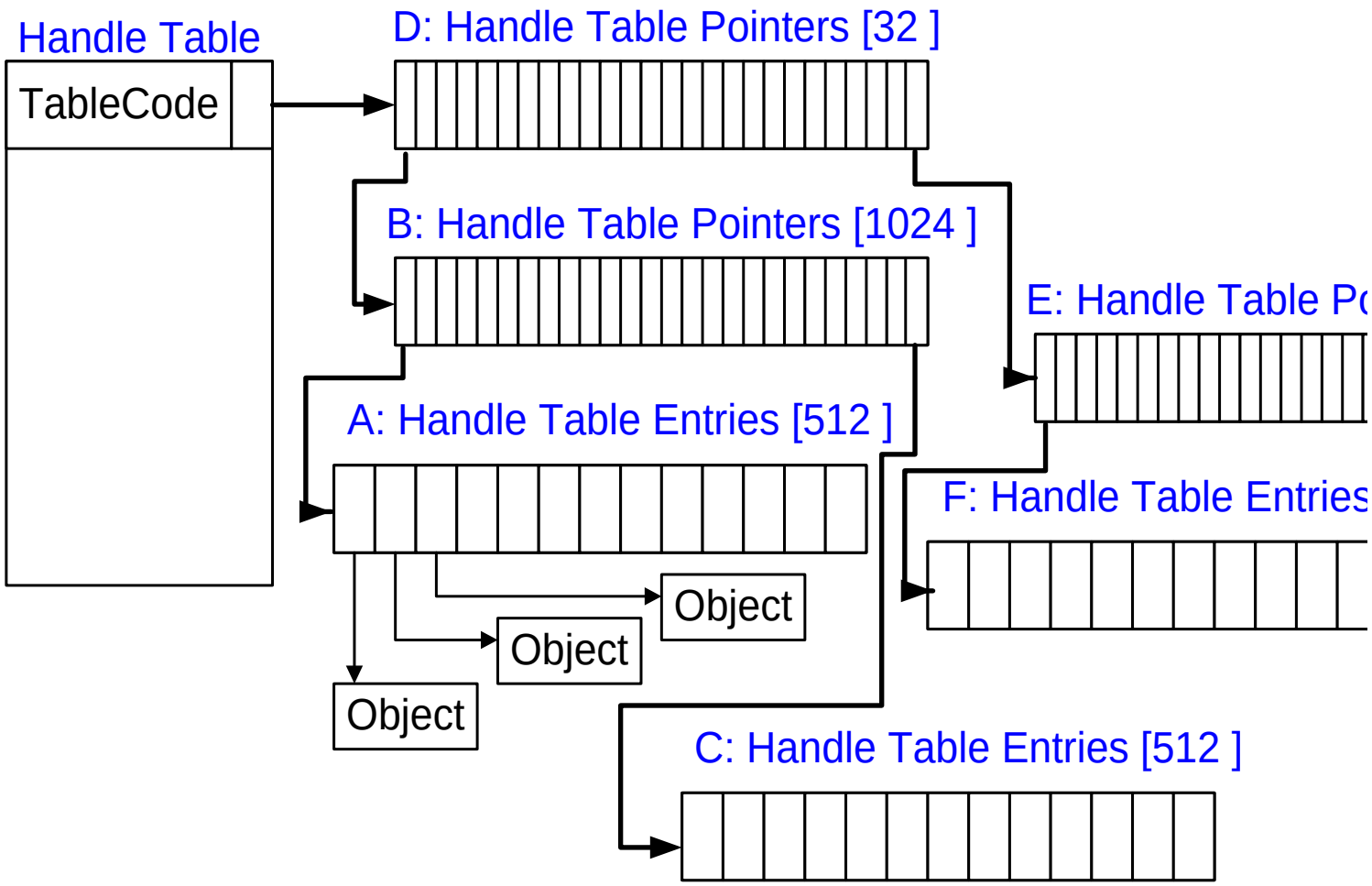

© Microsoft Corporation

Thread Manager Kernel Layer

© Microsoft Corporation

CPU Control-flow

Normal threads are composed of kernel-threads and user-threads, each with stack, and scheduling/environmental info

APCs (Asynchronous Procedure Calls) interrupt the execution of a thread, not a processor

DPCs (Deferred Procedure Calls) interrupt the execution of a processor, not a thread

Thread Pools and Worker threads used to spawn work as tasks and reducing thread create/delete overhead

© Microsoft Corporation

Threads

Unit of concurrency (abstracts the CPU)

Threads created within processes

System threads created within system process (kernel)

System thread examples:

- Dedicated threads
  - Lazy writer, modified page writer, balance set manager, mapped pager writer, other housekeeping functions
- General worker threads
  - Used to move work out of context of user thread
  - Must be freed before drivers unload
  - Sometimes used to avoid kernel stack overflows
- Driver worker threads
  - Extends pool of worker threads for heavy hitters, like file server

© Microsoft Corporation

Thread elements

user-mode

- user-mode stack
- Thread Environment Block (TEB)
  - most interesting: *thread local storage*

kernel-mode

- kernel-mode stack
- KTHREAD: scheduling, synchronization, timers, APCs
- ETHREAD: timestamps, I/O list, exec locks, process link
- thread ID
- impersonation token

© Microsoft Corporation

Context-switching Kernel VM

Three regions of kernel VM are switched

- Page tables and page directory self-map
- Hyperspace (working set lists)
- Session space

- Session space
  - ‘Session’ is a terminal services session
  - Contains data structures for kernel-level GUI
  - Only switched when processes in different TS session
- Switched kernel regions not usually needed in other processes
  - *Thread attach* is used to temporary context switch when they are
  - Savings in KVA is substantial, as these are very large data structures

© Microsoft Corporation

Kernel Thread Attach

Allows a thread in the kernel to temporarily move to a different process' address space

- Used heavily in Mm and Ps, e.g.
  - Used to access process page tables, working set descriptors, etc
  - PspProcessDelete() attaches before calling ObKillProcess() to close/delete handles in proper process context
- Used to access the TEB/PEB in user-mode
  - (Thread/Process Environment Blocks)

© Microsoft Corporation

NT thread priorities

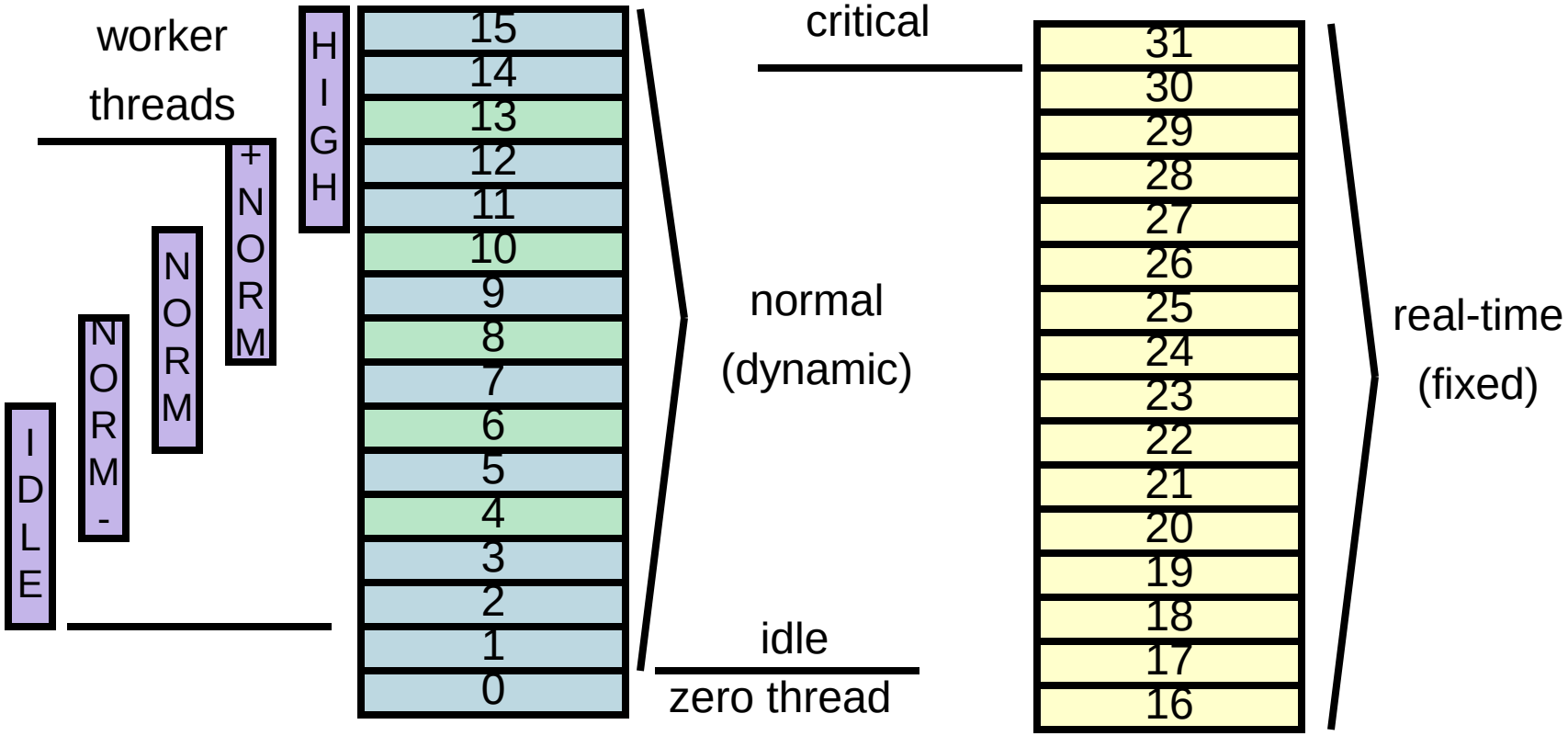

© Microsoft Corporation

Scheduling

Windows schedules threads, not processes

- Scheduling is preemptive, priority-based, and round-robin at the highest-priority
- 16 real-time priorities above 16 normal priorities
- Scheduler tries to keep a thread on its ideal processor/node to avoid perf degradation of cache/NUMA-memory
- Threads can specify affinity mask to run only on certain processors

Each thread has a current & base priority

- Base priority initialized from process
- Non-realtime threads have priority boost/decay from base
- Boosts for GUI foreground, waking for event
- Priority decays, particularly if thread is CPU bound (running at quantum end)

Scheduler is state-driven by timer, setting thread priority, thread block/exit, etc

Priority inversions can lead to starvation

- balance manager periodically boosts non-running runnable threads

© Microsoft Corporation

Scheduler

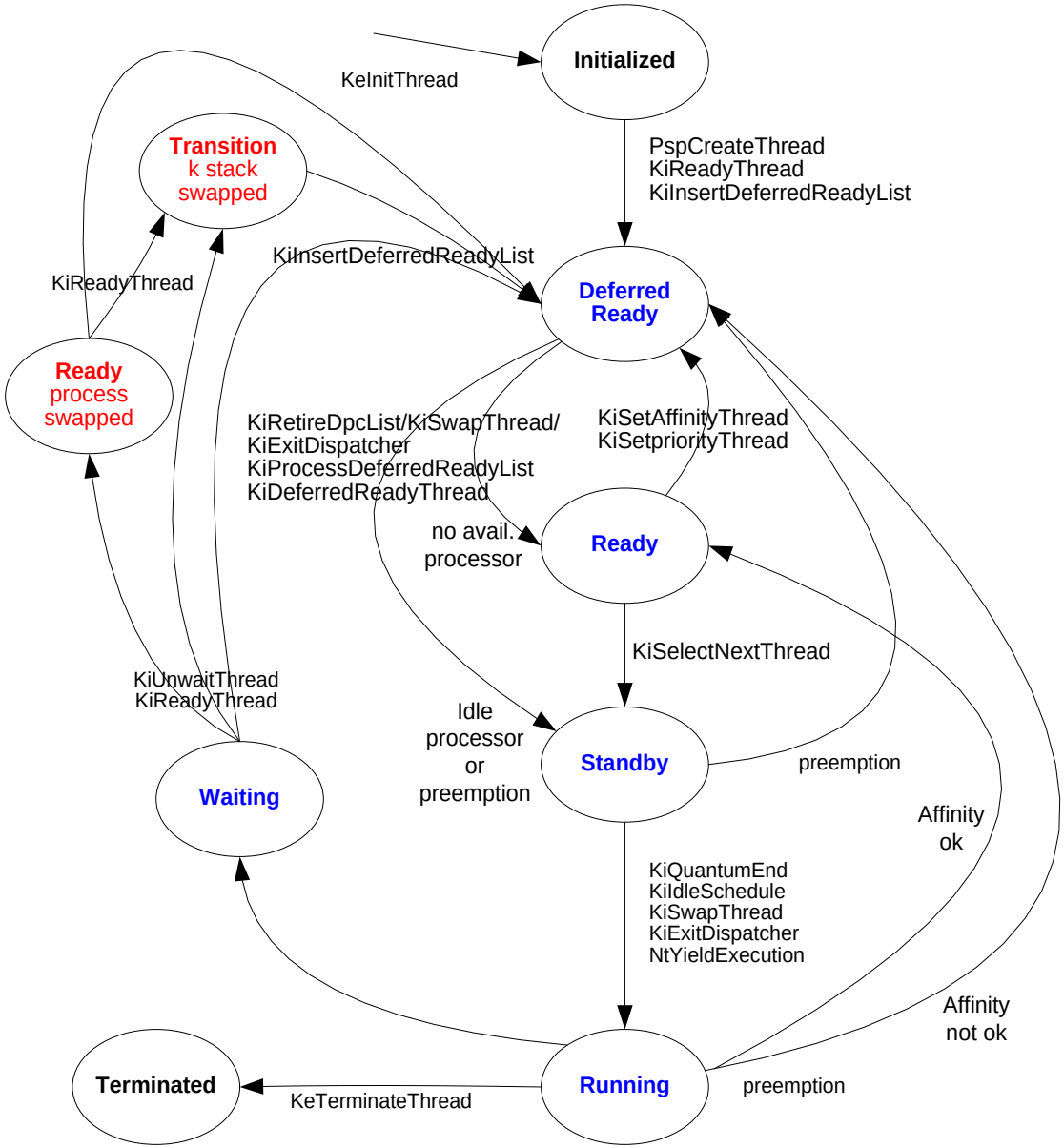

Kernel Thread Transition Diagram
DavePr@Microsoft.com
2003/04/06 v0.4b

Asynchronous Procedure Calls

APCs execute routine in thread context

- not as general as UNIX signals
- user-mode APCs run when blocked & alertable
- kernel-mode APCs used extensively: timers, notifications, swapping stacks, debugging, set thread ctx, I/O completion, error reporting, creating & destroying processes & threads, …

APCs generally blocked in critical sections

- e.g. don’t want thread to exit holding resources

© Microsoft Corporation

Asynchronous Procedure Calls

APCs execute code in context of a particular thread

APCs run only at PASSIVE or APC LEVEL (0 or 1)

- Interrupted by DPCs and ISRs

Three kinds of APCs

- **User-mode:** deliver notifications, such as I/O done
- **Kernel-mode:** perform O/S work in context of a process/thread, such as completing IRPs
- **Special kernel-mode:** used for process termination

© Microsoft Corporation

Process Manager
Memory Manager
Cache Manager

© Microsoft Corporation

Processes

- An environment for program execution
  - Namespaces (access to files & kernel objects)
  - virtual address mappings
  - ports (debug, exceptions)
  - threads
  - user authentication (token)
  - virtual memory data structures
  - PEB (Process Environment Block) in user-mode
- In Windows, a process abstracts the MMU, not the CPU

© Microsoft Corporation

Process Lifetime

- Process created as an empty shell
- Address space created with only system DLL and the main image (including linked DLLs)
- Handle table created empty or populated via duplication of inheritable handles from parent
- Add environment, threads, map executable image sections (EXE and DLLs)

- Process partially destroyed (“rundown”) at last thread exit
- Process totally destroyed on last dereference

© Microsoft Corporation

System DLL

Core user-mode functionality in the system dynamic link library (DLL) *ntdll.dll*

Mapped during process address space setup by the kernel

Contains all core system service entry points

User-mode trampoline points for:

- Process/thread startup
- Exception dispatch
- User APC dispatch
- Kernel-user callouts

© Microsoft Corporation

Process/Thread structure

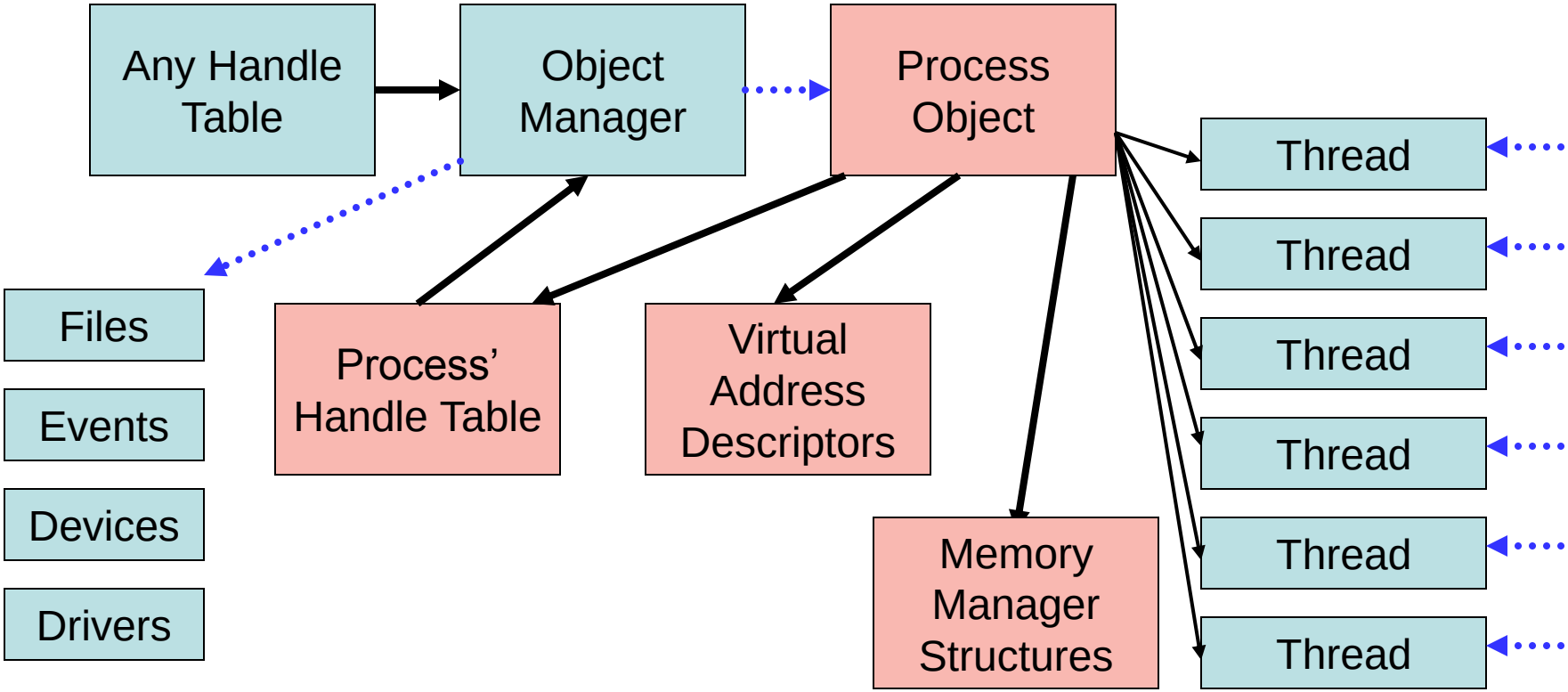

© Microsoft Corporation

Physical Frame Management

- Table of PFN (Physical Frame Number) data structures
  - Represent all pageable pages
  - Synchronize page-ins
  - Linked to management lists
- Page Tables
  - Hierarchical index of page directories and tables
  - Leaf-node is *page table entry* (PTE)
  - PTE states:
    - Active/valid
    - Transition
    - Modified-no-write
    - Demand zero
    - Page file
    - Mapped file

© Microsoft Corporation

Virtual Memory Management

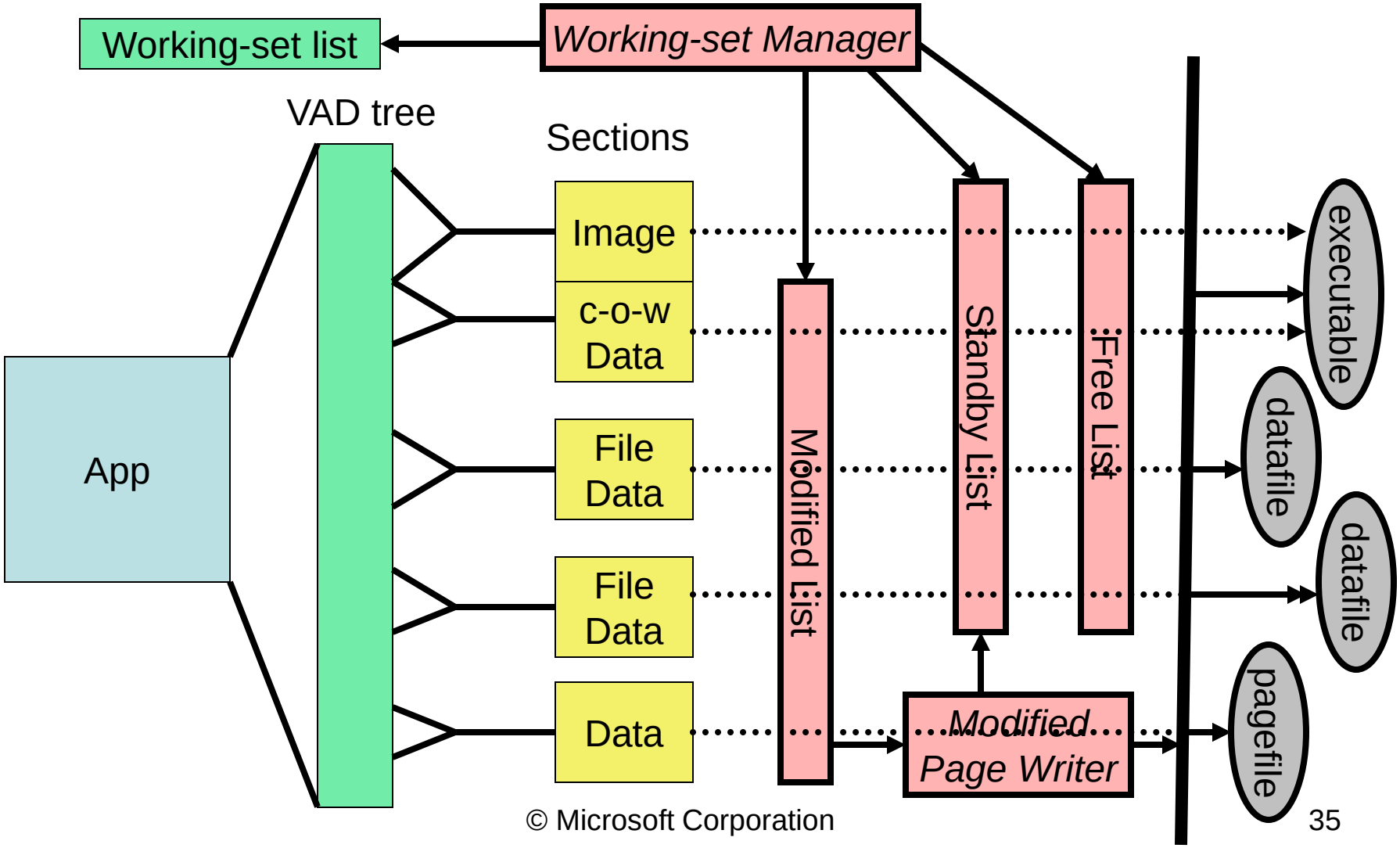

© Microsoft Corporation

Physical Frame State Changes

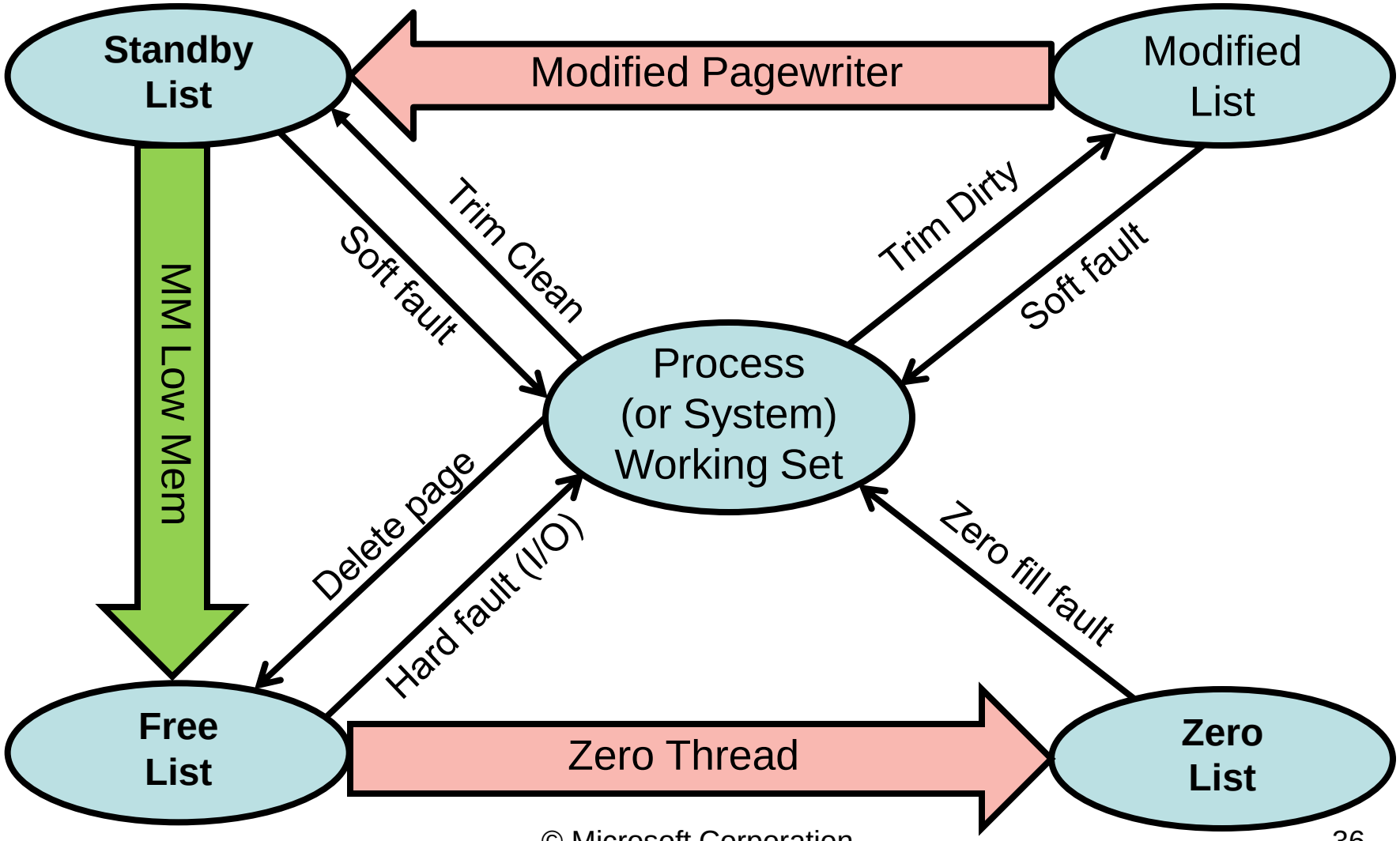

© Microsoft Corporation

32b Virtual Address Translation

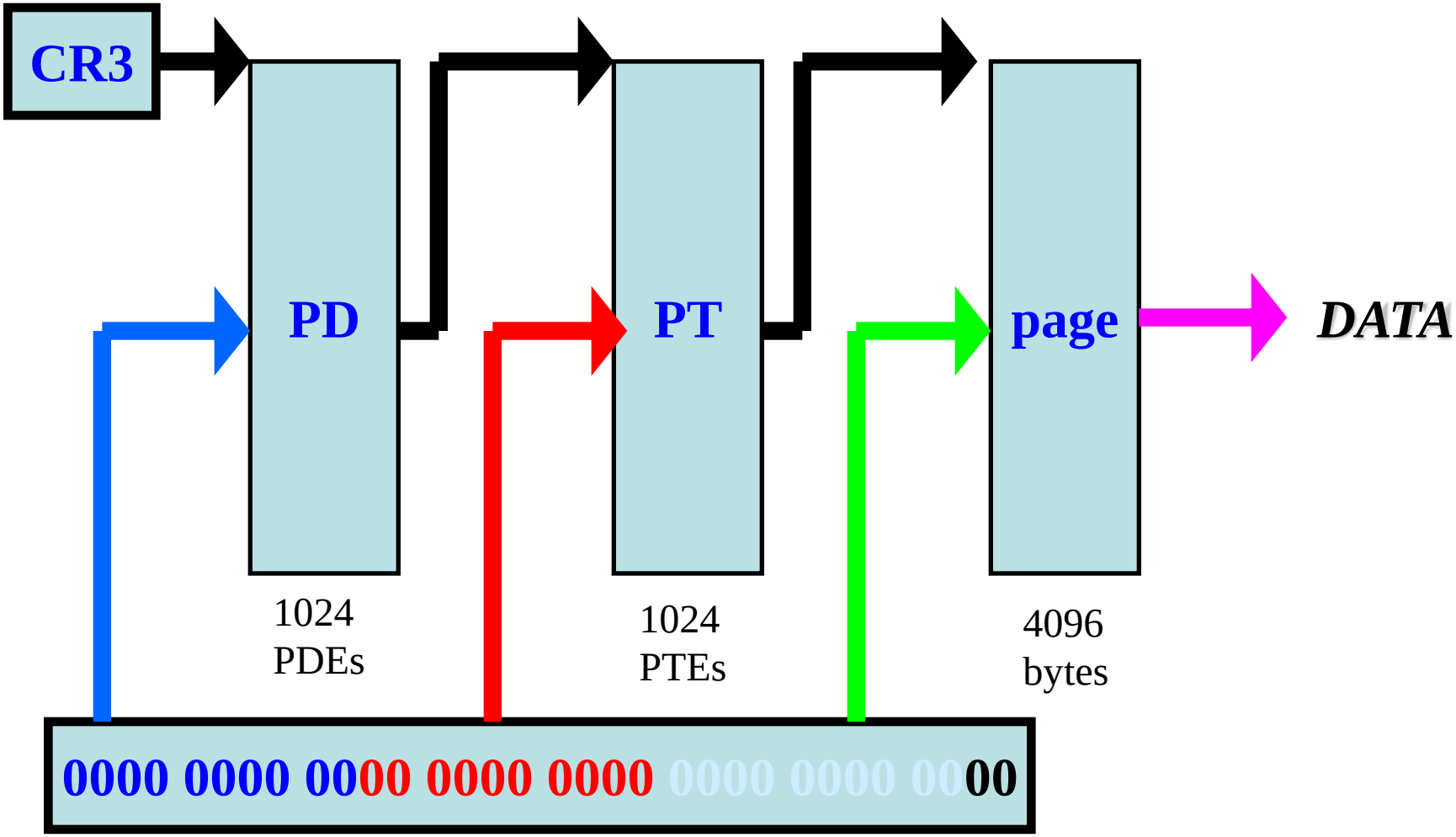

© Microsoft Corporation

Self-mapping page tables

Virtual Access to PageDirectory[0x300]

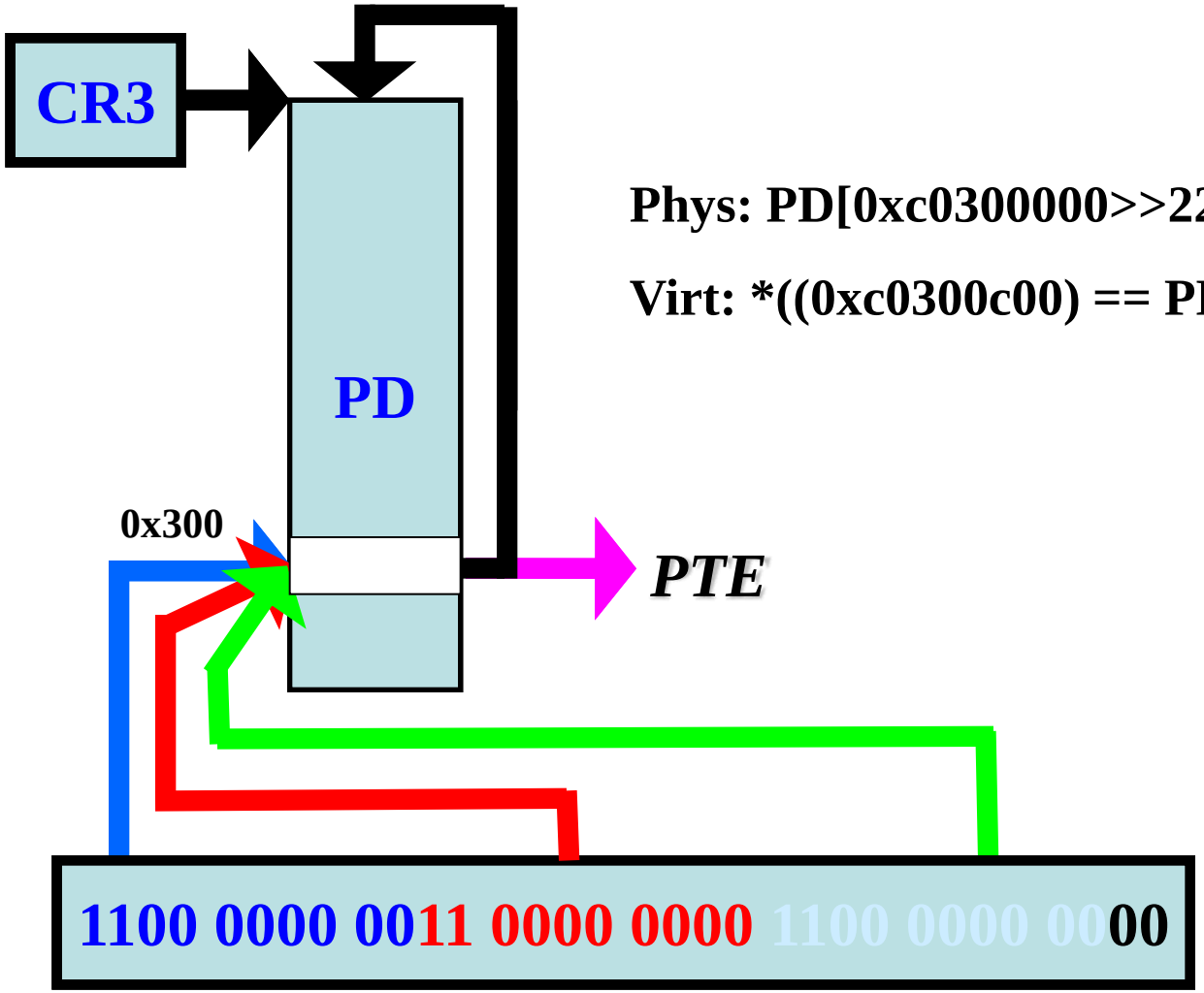

Phys: PD[0xc0300000>>22] = PD

Virt: *((0xc0300c00) == PD

© Microsoft Corporation

Self-mapping page tables

Virtual Access to PTE for va 0xe4321000

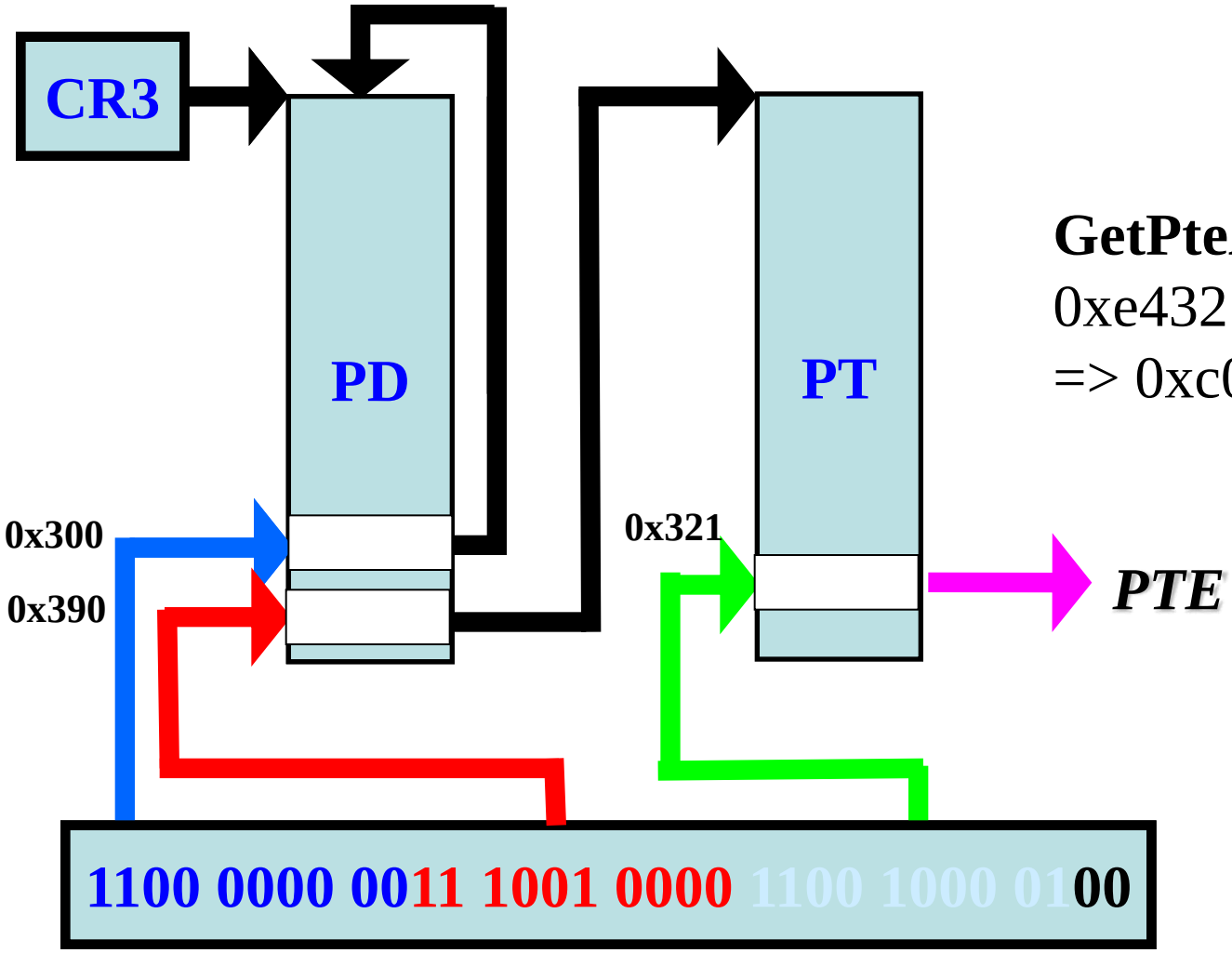

GetPteAddress:
0xe4321000
=> 0xc0390c84

© Microsoft Corporation

I/O

© Microsoft Corporation

I/O Model

- Extensible filter-based I/O model with driver layering
- Standard device models for common device classes
- Support for notifications, tracing, journaling
- Configuration store
- File caching is virtual, based on memory mapping
- Completely asynchronous model (with cancellation)

© Microsoft Corporation

I/O Request Packet (IRP)

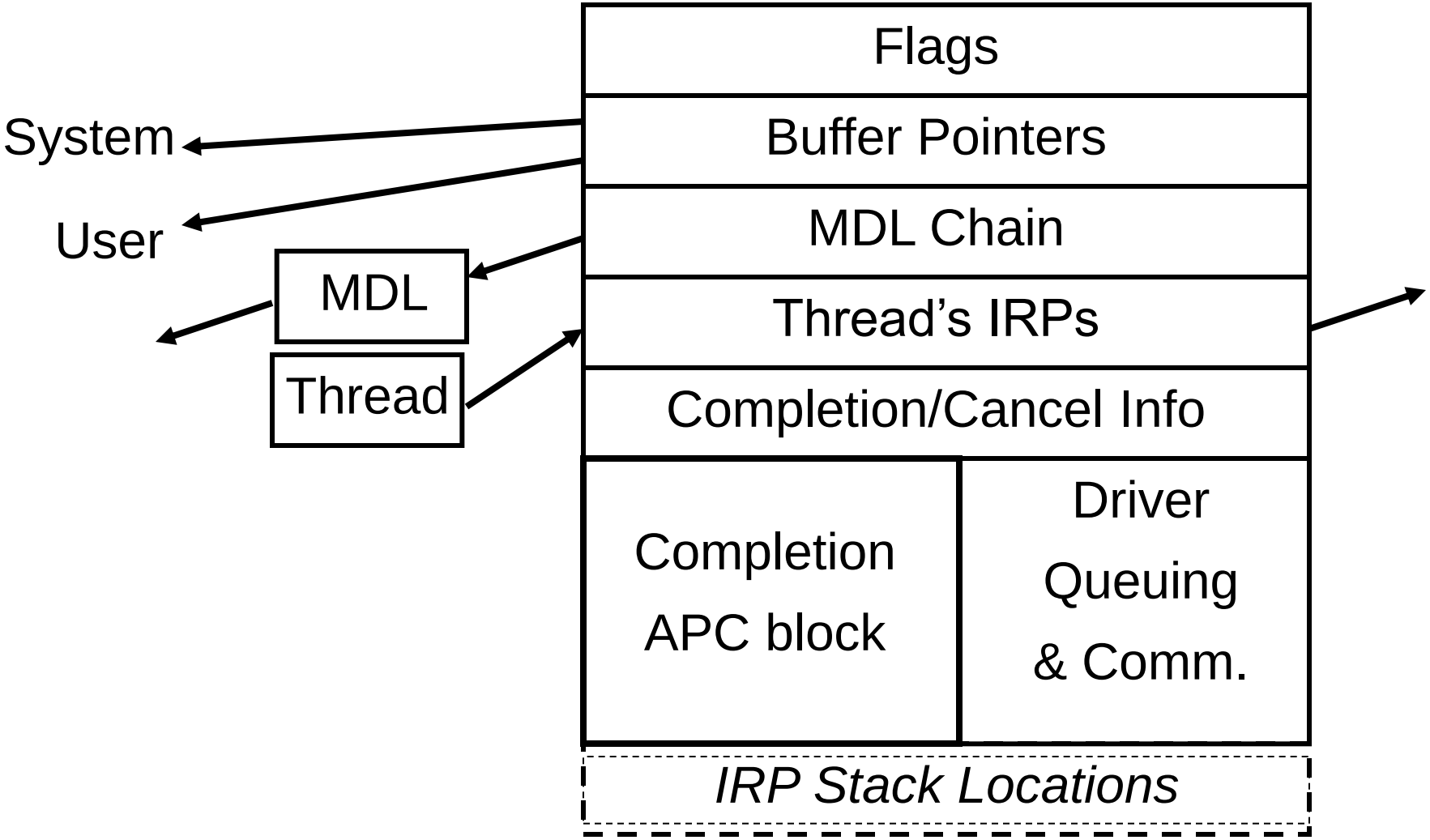

© Microsoft Corporation

Layering Drivers

Device objects attach one on top of another using IoAttachDevice* APIs creating device stacks

- I/O manager sends IRP to top of the stack
- Drivers store next lower device object in their private data structure
- Stack tear down done using IoDetachDevice and IoDeleteDevice

Device objects point to driver objects

- Driver represent driver state, including dispatch table

© Microsoft Corporation

File System Device Stack

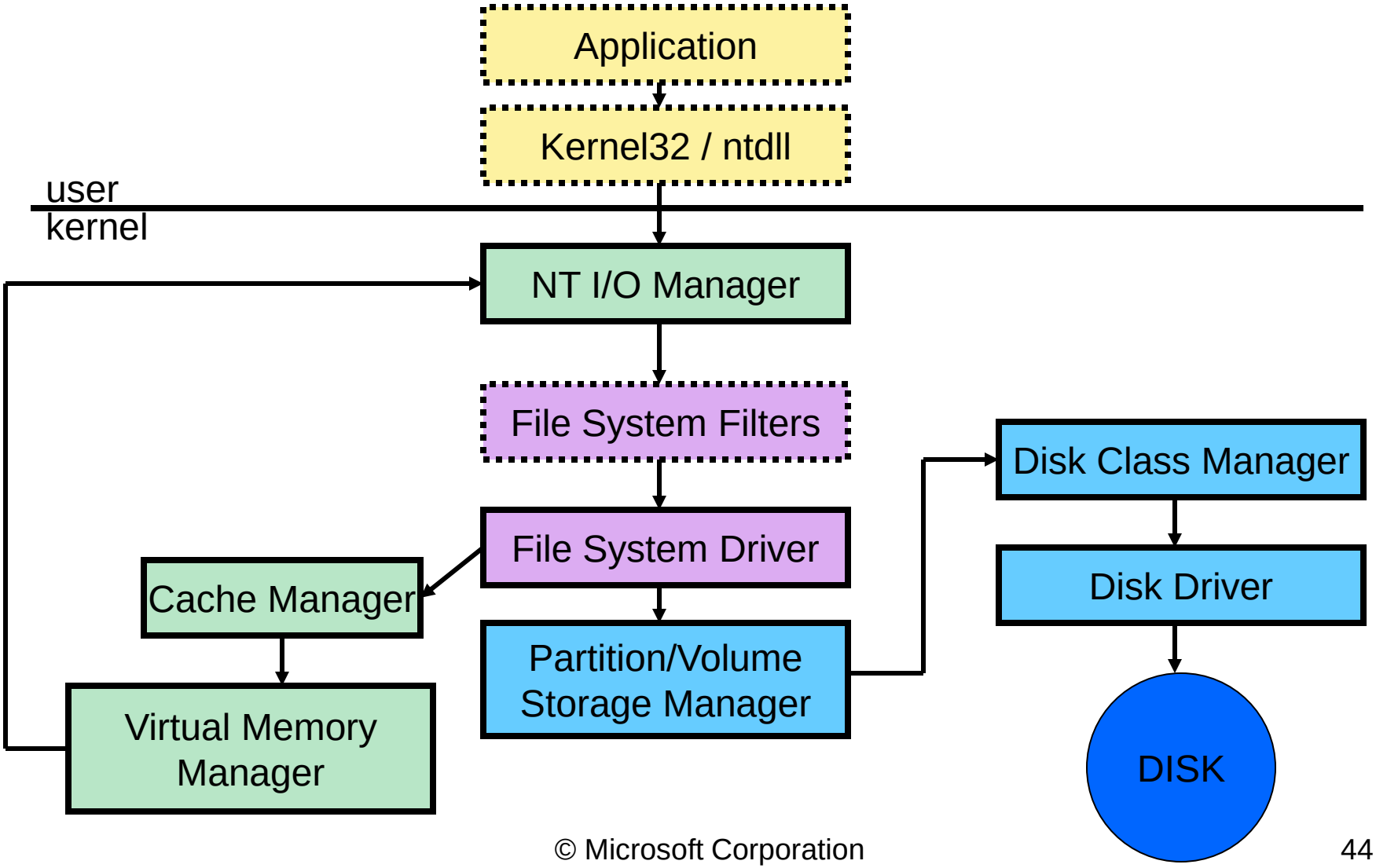

© Microsoft Corporation

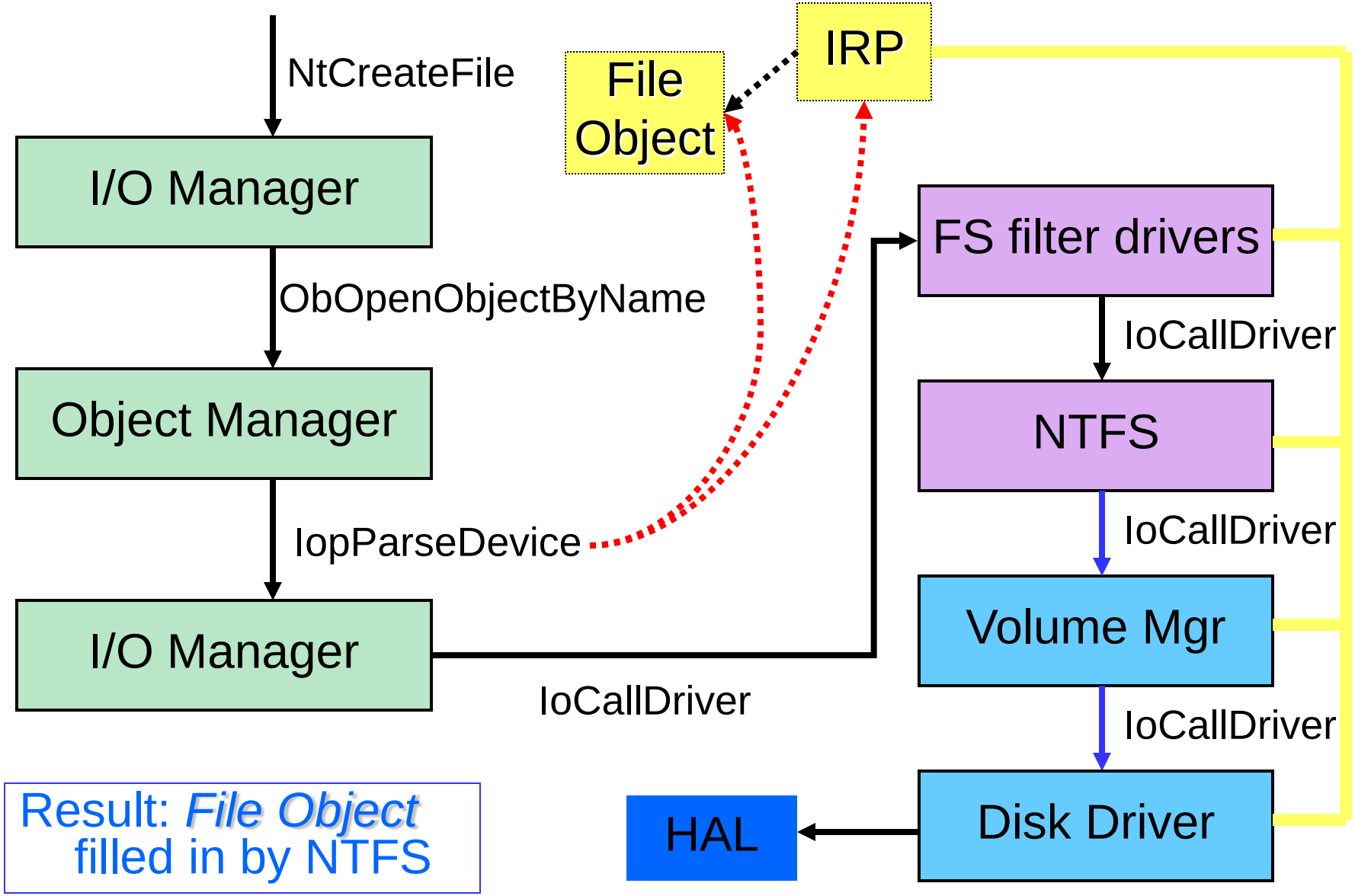

Result: *File Object* filled in by NTFS

© Microsoft Corporation

I/O Completions

- Receiving notification for asynchronous I/O completion:
  - poll status variable
  - wait for the file handle to be signalled
  - wait for an explicitly passed event to be signalled
  - specify a routine to be called on the originating ports
  - use an I/O completion port

© Microsoft Corporation

I/O Completion Ports

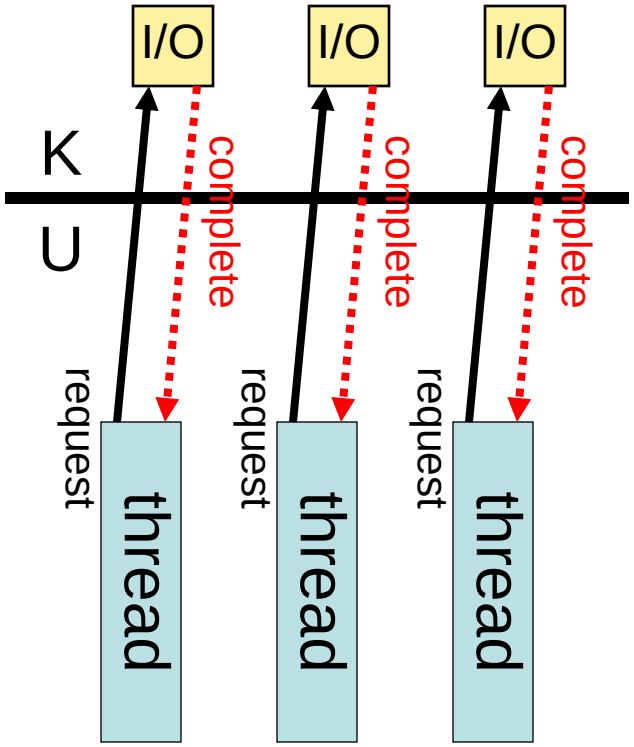

normal completion

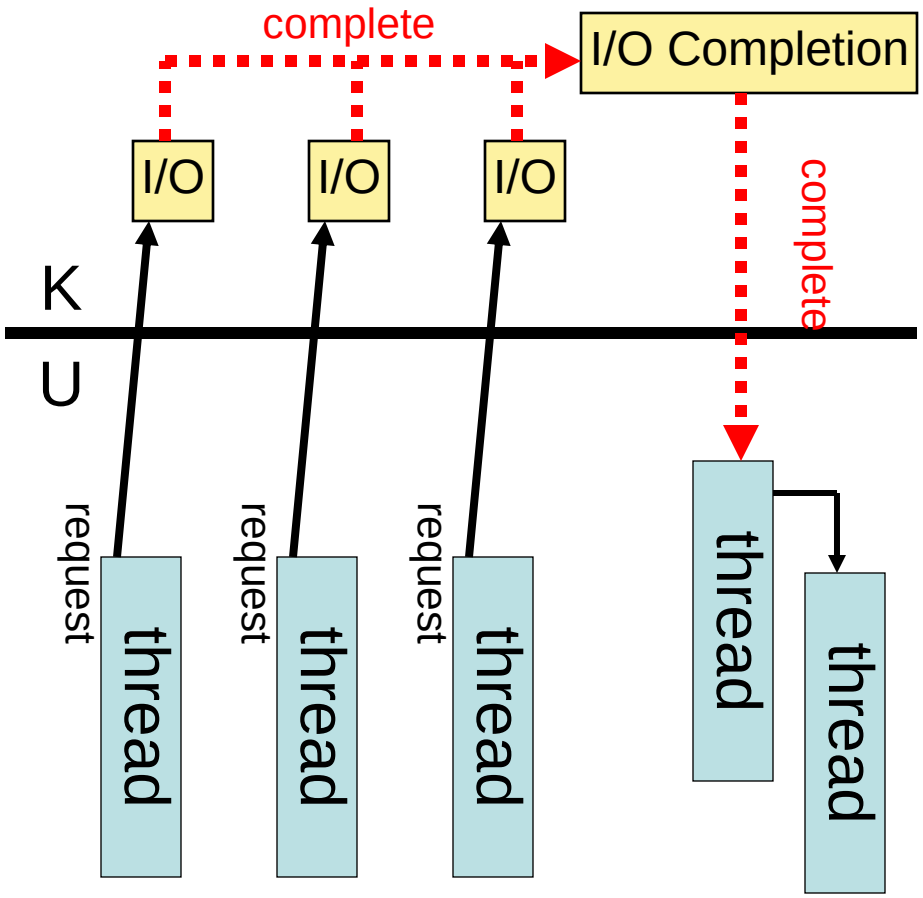

I/O completion ports

© Microsoft Corporation

Questions